成都巨人微波
TITAN MICROWAVE INC.
- A Professional RF & Microwave Components Supplier -

TMPD2-00501050-20S

TMPD2-00501050-20S

0.5 to 10.5 GHz, 20W, SMA Female
2-WAY POWER DIVIDER

Electrical Characteristics

FREQUENCY RANGE	500～10500MHz
INSERTION LOSS	1.4dB max.
(excluding theoretical insertion loss 3.0dB)	
AMPLITUDE BALANCE	±0.3dB
PHASE BALANCE	±3 Deg.
VSWR(input port)	≤1.45@500～600MHz
	≤1.25@600～10500MHz
VSWR(output ports)	1.15 typ. & 1.25 max.
ISOLATION	26dB typ. & 18dB min.
IMPEDANCE	50 Ohms
POWER RATING(as a divider)	20W
POWER RATING(as a combiner)	1W

Mechanical and Enviromental Characteristics

Dimensions	74×28×10mm
RF Connectors	SMA female
Surface Finishing	Black Paint
Operating Temperature	-45℃ ～ +85℃
Weight	56g

Outline Drawing(mm[inch])

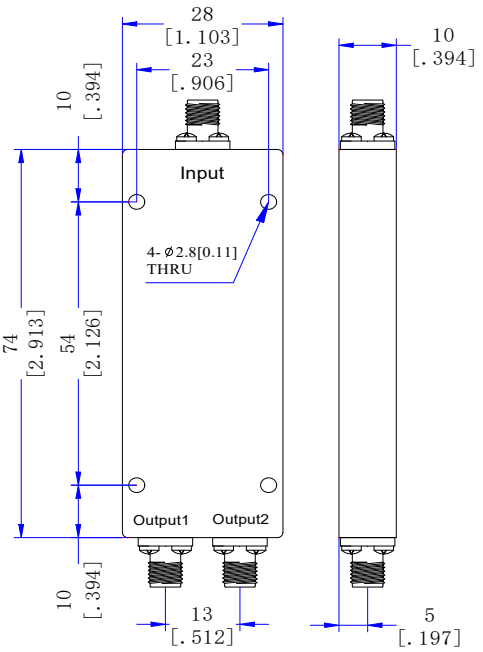

All product specifications are subject to change without notice