成都巨人微波
TITAN MICROWAVE INC.
- A Professional RF & Microwave Components Supplier -

TMPD4-02000900-30S

TMPD4-02000900-30S

2 to 9 GHz, 30W, SMA Female
4-WAY POWER DIVIDER

Electrical Characteristics

FREQUENCY RANGE	2000~9000MHz
INSERTION LOSS	2.0dB max.
(excluding theoretical insertion loss 6.0dB)	
AMPLITUDE BALANCE	±0.3dB
PHASE BALANCE	±4 Deg.
VSWR(input port)	1.18 typ. & 1.4 max.
VSWR(output ports)	1.15 typ. & 1.3 max.
ISOLATION	28dB typ. & 18dB min.
IMPEDANCE	50 Ohms
POWER RATING(as a divider)	30W
POWER RATING(as a combiner)	2W

Mechanical and Environmental Characteristics

Dimensions	56×56×10mm
RF Connectors	SMA female
Surface Finishing	Black Paint
Operating Temperature	-45℃ ~ +85℃
Weight	78g

Outline Drawing(mm[inch])

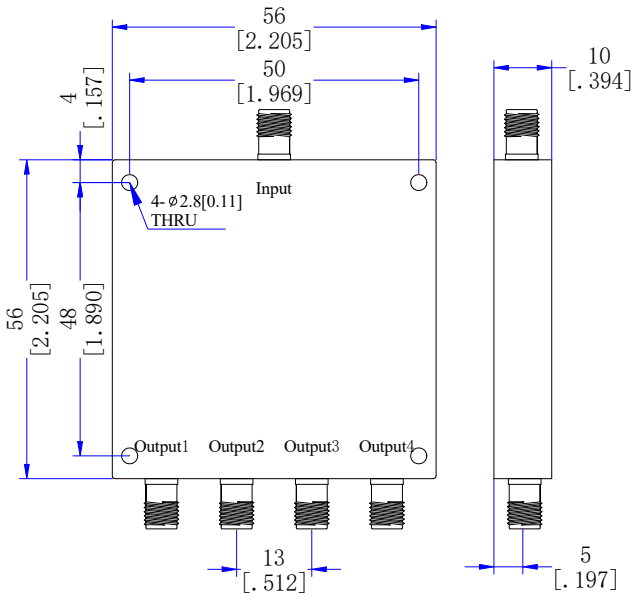

All product specifications are subject to change without notice