TMPS1-06001800-S

PIN Diode Switch | 6 to 18 GHz
SP1T, Absorptive, 0.2 Watts, SMA Female

SPECIFICATIONS

Frequency Range:	6000~18000 MHz
Impedance	50Ω
VSWR	2.0 max. / 1.5 typ.
Insertion Loss	2.8dB max. / 2.1dB typ.
Isolation	60dB min. / 80dB typ.
Switch type	Absorptive, SP1T
Switching Time	100nS
RF Input Power(CW)	0.2 Watts
Supply Voltage	±5V
Current	30mA
Operating Temp.	-40°C~+85°C
TTL Control Connector	Solder Pin [0-on 1-off]
Connector Type	Field Replaceable SMA Female (0.38mm Pin)

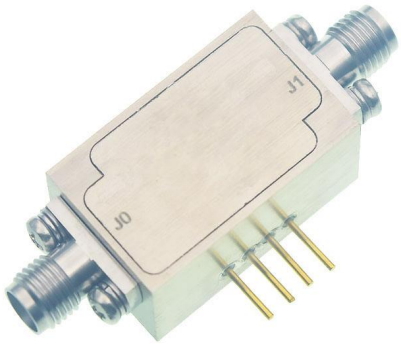

50 Ohm Typical Characteristics

Frequency	VSWR (S11)	VSWR (S22)	Loss (S21)	Isolation (S22)
GHz	:1	:1	dB	dB
2	1.69	1.68	-1.21	-89.03
3	1.34	1.34	-1.04	-85.14
4	1.09	1.11	-1.05	-87.4
6	1.4	1.34	-1.29	-86.85
7	1.49	1.4	-1.44	-86.94
8	1.48	1.35	-1.51	-85.99
9	1.37	1.28	-1.53	-87.38
11	1.14	1.25	-1.69	-87.45
12	1.22	1.27	-1.72	-87.11
13	1.26	1.38	-1.82	-88.24
14	1.25	1.41	-1.92	-86.23
15	1.19	1.45	-1.95	-89.45
17	1.2	1.06	-2.07	-88.11
18	1.23	1.12	-2.17	-88.17
19	1.34	1.23	-2.33	-85.96

Dimensions[mm]

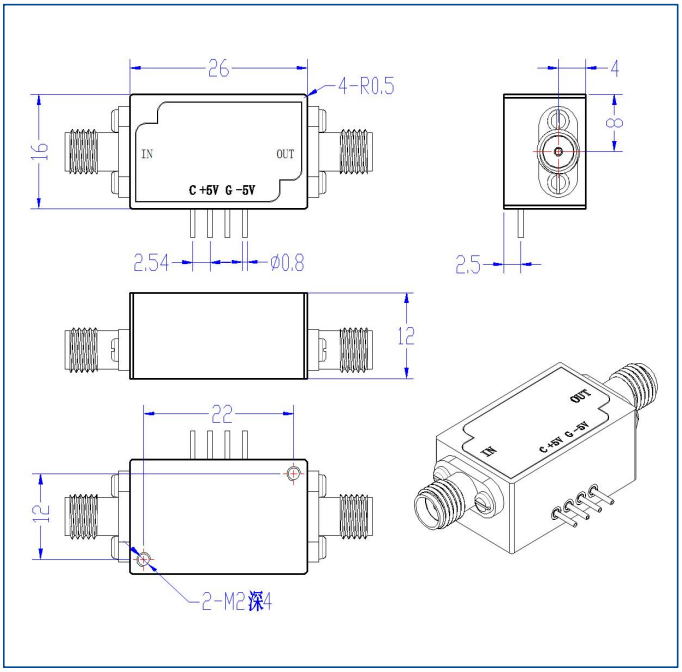

Typical Test Curve

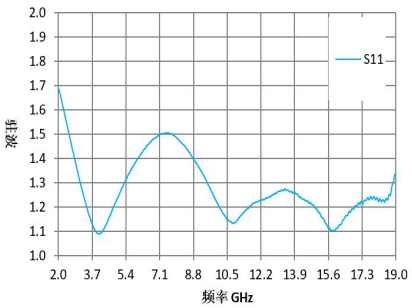

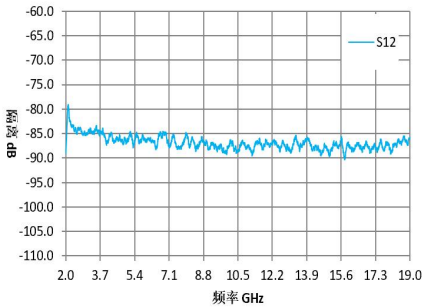

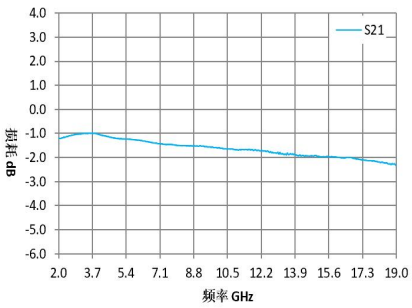

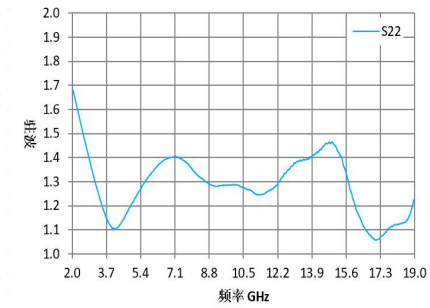

All product specifications are subject to change without notice