成都巨人微波
TITAN MICROWAVE INC.
- A Professional RF & Microwave Components Supplier -

Dual Directional Coupler

TDDC-02001800-20S30 2-18 GHz, 20dB, 30W, SMA Female

FEATURES

- Wide Band Operation 2-18 GHz
- Power Handle Capability up to 30W
- 20 dB Typical Coupling
- Low Insertion Loss

APPLICATIONS

- Frequency Measurements
- Signal Levelling, Signal Sampling
- Signal Injection
- Reflection Coefficient Measurements
- Measure incident and reflected power to determine VSWR

SPECIFICATIONS

Parameters		Min.	Typ.	Max.	Units
Frequency Range		2	-	18	GHz
Impedance		-	50	-	Ohms
Nominal Coupling		19	20	21	dB
Frequency Sensitivity		-	-	±1.0	dB
Directivity		12	-	-	dB
Insertion Loss(Excluding coupling loss 0.08dB)		-	-	1.5	dB
VSWR Primary		-	-	1.5	:1
VSWR Secondary		-	-	1.5	:1
Power Handling	Incident	-	-	30	W
	Reflected	-	-	30	W
Operating Temperature		-40	-	+85	℃
Storage Temperature		-50	-	+105	℃
Input/Output Connectors		SMA-Female			
Weight		70g			
Dimensions		88mm×19.05mm×11mm			
Surface Finishing		Black/Blue Paint			
Material		Aluminum			

Outline Drawing [mm[inch]]

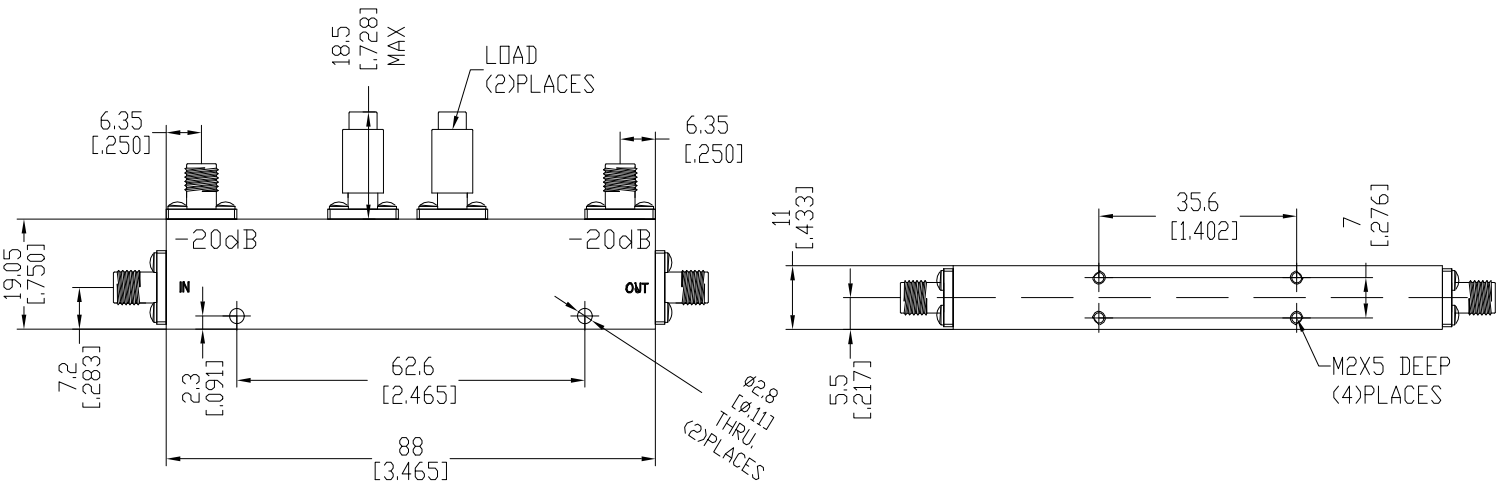

Tolerances ±0.5[0.02]