成都巨人微波
TITAN MICROWAVE INC.
- A Professional RF & Microwave Components Supplier -

Power Divider

TMPD4-10002000-20S

10-20 GHz, 20W, SMA-Female, 4-Way

Specifications

Parameters		Min.	Typ.	Max.	Units
Frequency Range		10	-	20	GHz
Insertion Loss(excluding theoretical insertion loss 6.02dB)		-	-	1.8	dB
Amplitude Balance		-	-	±0.5	dB
Phase Balance		-	-	±5	Deg
VSWR(input port)		-	-	1.7	:1
VSWR(output ports)		-	-	1.5	:1
Isolation		16	-	-	dB
Impedance		-	50	-	Ohm
Power Handling	Forward	-	-	20	W
	Reversed	-	-	1	W
Operating Temperature		-55	-	+85	℃
RF Connectors		SMA-Female			
Surface Finishing		Black/Blue Paint			
Weight		40g			

Outline Drawing [mm[inch]]

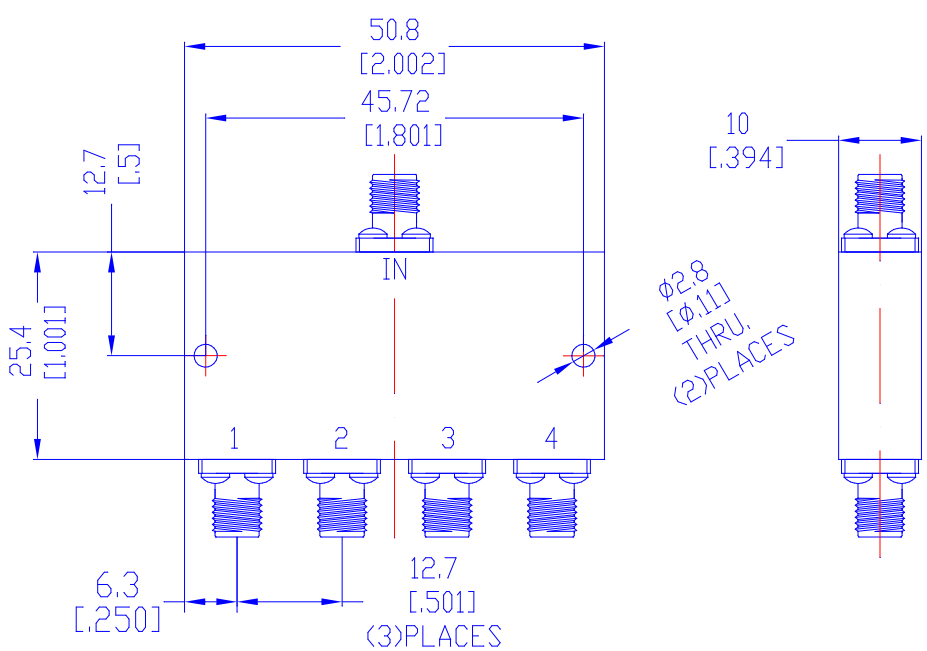

For RFQ please email to chris@titan-microwave.com