成都巨人微波
TITAN MICROWAVE INC.
- A Professional RF & Microwave Components Supplier -

Power Divider

TMPD4-03100350-30S

3.1-3.5 GHz, 30W, SMA Female, 4-Way

Specifications

Parameters		Min.	Typ.	Max.	Units
Frequency Range		3.1	-	3.5	GHz
Insertion Loss(excluding theoretical insertion loss 6.02dB)		-	-	0.45	dB
Amplitude Balance		-	-	±0.1	dB
Phase Balance		-	-	±2	Deg
VSWR(input port)		-	-	1.3	:1
VSWR(output ports)		-	-	1.2	:1
Isolation		23	-	-	dB
Impedance		-	50	-	Ohm
Power Handling	Forward	-	-	30	W
	Reversed	-	-	1	W
Operating Temperature		-55	-	+85	℃
RF Connectors		SMA-Female			
Surface Finishing		Black/Blue Paint			
Weight		50g			
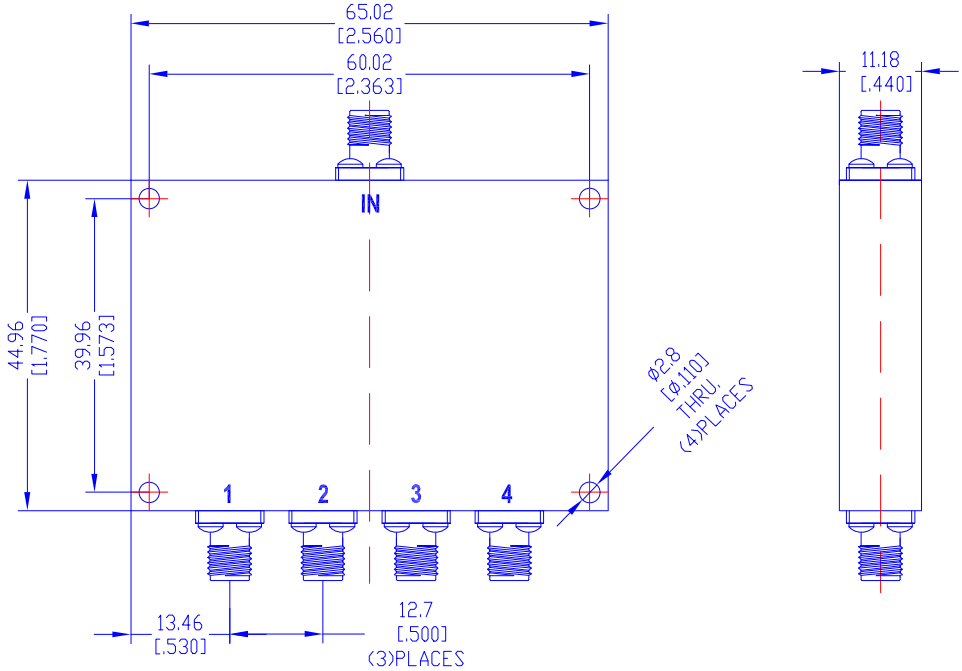
Outline Drawing [mm[inch]]