成都巨人微波
TITAN MICROWAVE INC.
- A Professional RF & Microwave Components Supplier -

Directional Coupler

TMDC-00600390-30S100 0.6-3.9 GHz, 30dB, 100W, SMA-Female

FEATURES

- Wide Band Operation 0.6-3.9 GHz
- Power Handle Capability up to 100W
- 30 dB Typical Coupling
- Low Insertion Loss

APPLICATIONS

- Frequency Measurements
- Signal Levelling, Signal Sampling
- Signal Injection
- Reflection Coefficient Measurements
- Measure incident and reflected power to determine VSWR

SPECIFICATIONS

Parameters	Min.	Typ.	Max.	Units
Frequency Range	0.6	-	3.9	GHz
Impedance	-	50	-	Ohms
Nominal Coupling	28.5	30	31.5	dB
Directivity	18	-	-	dB
Insertion Loss	-	-	0.5	dB
VSWR Primary	-	-	1.2	:1
Average Power	-	-	100	W
Operating Temperature	-20	-	+60	℃
Storage Temperature	-40	-	+70	℃
Input/Output Connectors	SMA-Female			
Connector Body	Nickel Plated Brass			
Weight	150g max			
Dimenions	78×12×24mm			
Material	Aluminum			

Outline Drawing[mm]

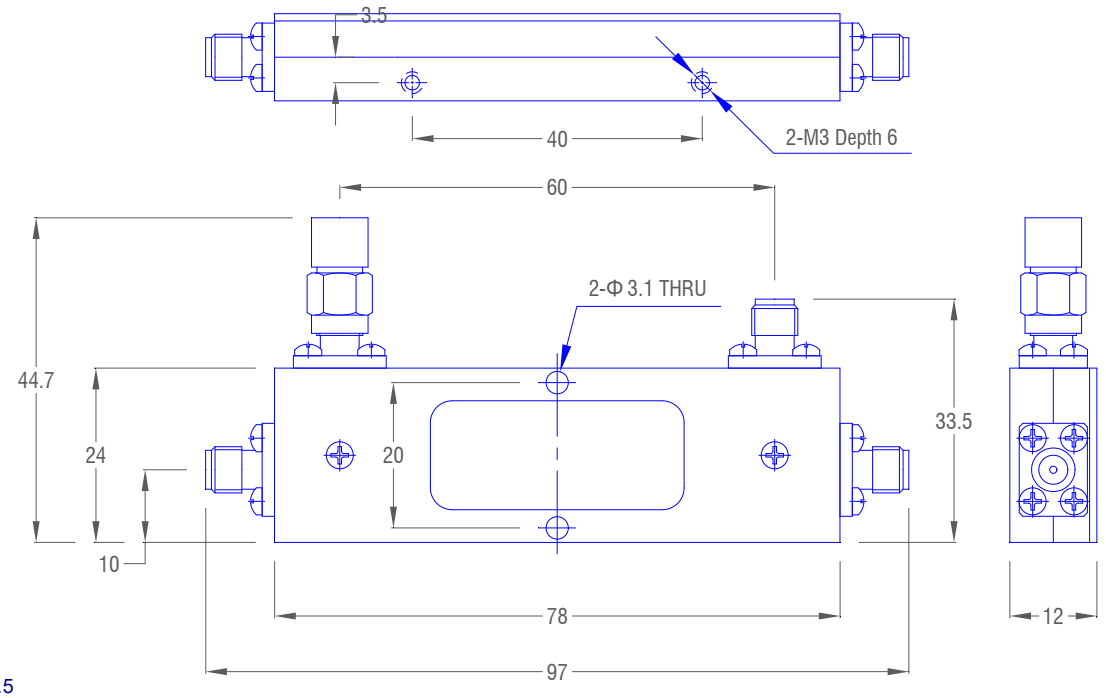

Tolerances ±0.5