成都巨人微波
TITAN MICROWAVE INC.
- A Professional RF & Microwave Components Supplier -

# Dual Directional Coupler

## TDDC-06001800-40NS200 6-18 GHz, 40dB Coup, 200W, N(m-f), SMA(f)

### FEATURES

- Wide Band Operation 6-18 GHz
- Power Handle Capability up to 200W
- 40 dB Typical Coupling
- Low Insertion Loss

### APPLICATIONS

- Frequency Measurements
- Signal Levelling, Signal Sampling
- Signal Injection
- Reflection Coefficient Measurements
- Measure incident and reflected power to determine VSWR

### SPECIFICATIONS

| Parameters | Min. | Typ. | Max. | Units |
|---|---|---|---|---|
| Frequency Range | 6 | - | 18 | GHz |
| Impedance | - | 50 | - | Ohms |
| Nominal Coupling | 38.5 | 40 | 41.5 | dB |
| Directivity | 15 | - | - | dB |
| Insertion Loss | - | - | 0.8 | dB |
| VSWR Primary | - | - | 1.35 | :1 |
| VSWR Secondary | - | - | 1.5 | :1 |
| Power Handling | - | - | 200 | W |
| Operating Temperature | -55 | - | +75 | ℃ |
| Input/Output Connectors | N-Male/N-Female | | | |
| Coupling Connectors | SMA-Female | | | |
| Dimensions | 33×24×18mm | | | |
| Surface Finishing | Conductive Oxidation | | | |
| Material | Aluminum | | | |

### Outline Drawing[mm]

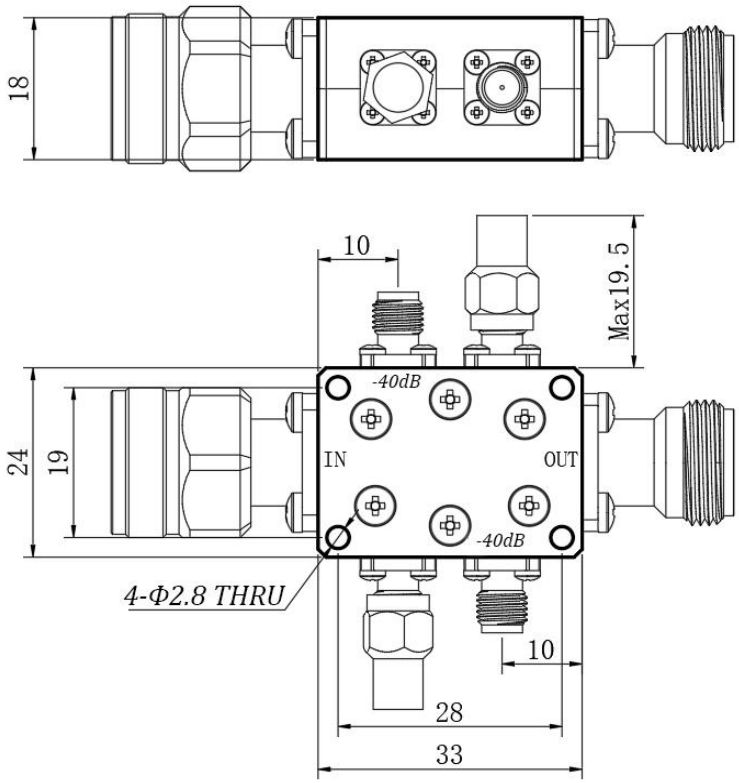


Tolerances ±0.5[0.02]