PART NUMBER
TBF-37304220-80Q

REV.	DATE	COMMENTS	INITIAL
1	2020/9/17	ENGINEERING RELEASE	

Specifications

RoHS Compliant

Passband Frequency Range 37300-42200MHz
Center Frequency(F_0) 39750MHz
Passband Insertion Loss ..... 1.1dB max
Passband Ripple ..... 0.3dB max
Passband Return Loss ..... 18dB min
Stopband Rejection ..... 80dB min@DC-34950MHz
..... 60dB min@44200-44950MHz
..... 80dB min@44950-58500MHz
Power Handling ..... 5W max
Impedance ..... 50 Ohms
Operating Temperature ..... -40℃~+85℃
Connectors ..... Input: 2.4mm-Female/Output: 2.4mm-Male
Housing Material ..... H62 Copper Alloy
Finish ..... Black Painted
Weight 55g

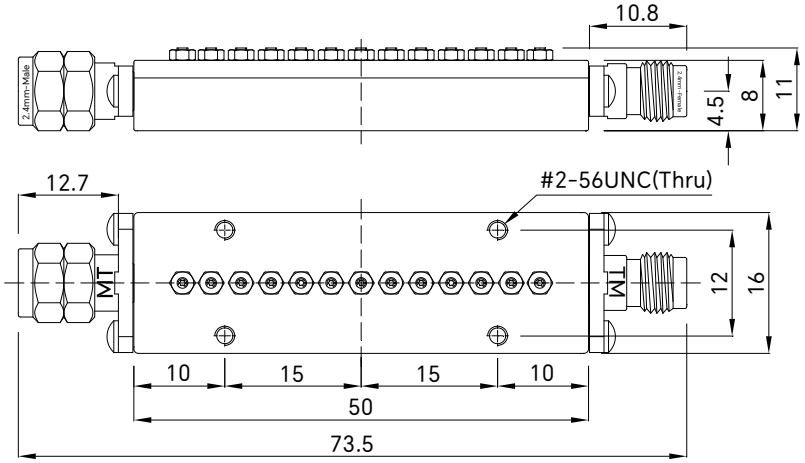

Drawing not to scale, units:mm

成都巨人微波
TITAN MICROWAVE INC.
- A Professional RF & Microwave Components Supplier -

www.titan-microwave.com
Tel: +86 130 866 58398
Email: sales@titan-microwave.com
chris@titan-microwave.com

PART NUMBER		DESCRIPTION
TBF-37304220-80Q		Cavity Band Pass Filter, Passband 37.3~42.2GHz Stopband Rejection 80dB, 5W, 2.4mm-Male/Female
CAGE CODE	SIGNATURE	

EXCEPT AS OTHERWISE PROVIDED BY CONTRACTOR THIS DRAWING OR SPECIFICATION IS PROPERTY OF TITAN MICROWAVE INC. IT IS ISSUED IN STRICT CONFIDENCE AND SHALL NOT BE REPRODUCED OR USED AS THE BASIS.