PART NUMBER
TBF-00110017-50N

REV.	DATE	COMMENTS	INITIAL
1	2020/3/13	ENGINEERING RELEASE	

Specifications

RoHS Compliant

Passband Frequency Range 110-170MHz
Center Frequency(F_0) 140MHz
Passband Insertion Loss ..... 1.8dB max
Passband Ripple ..... 1.0dB max
Passband Return Loss ..... 15dB min
Stopband Rejection ..... 50dB min@DC-80MHz
..... 50dB min@200-800MHz
Power Handling ..... 1W max
Impedance ..... 50 Ohms
Operating Temperature ..... -30℃~+70℃
Connectors ..... N-Female
Housing Material ..... Aluminum 6061
Finish ..... Black Painted
Weight 70g

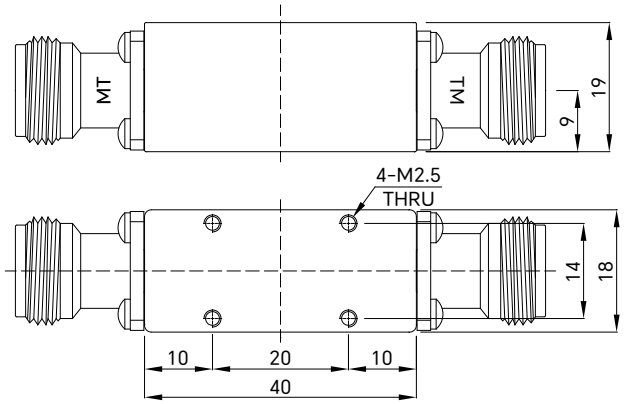

Drawing not to scale, units:mm

成都巨人微波
TITAN MICROWAVE INC.
- A Professional RF & Microwave Components Supplier -

www.titan-microwave.com
Tel: +86 130 866 58398
Email: sales@titan-microwave.com
chris@titan-microwave.com

PART NUMBER		DESCRIPTION
TBF-00110017-50N		LC Band Pass Filter, Passband 0.11~0.17GHz Stopband Rejection 50dB, 1W, N-Female
CAGE CODE	SIGNATURE	

EXCEPT AS OTHERWISE PROVIDED BY CONTRACTOR THIS DRAWING OR SPECIFICATION IS PROPERTY OF TITAN MICROWAVE INC. IT IS ISSUED IN STRICT CONFIDENCE AND SHALL NOT BE REPRODUCED OR USED AS THE BASIS.