REV	DESCRIPTION OF REVISION	By	DATE	APPROVED
A	INITIAL RELEASE	C. Cai	2022/3/26	C. Chen

TECHNICAL DATA

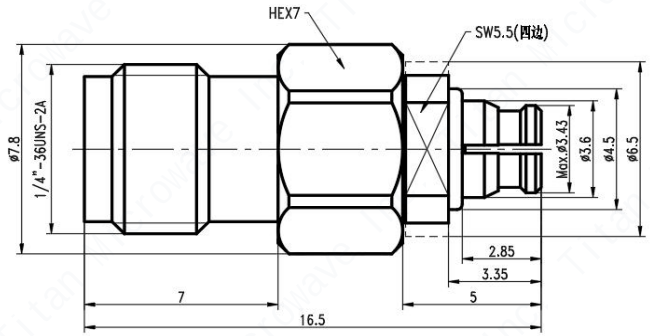

▶ Electrical Characteristic

Frequency Range	DC~18GHz
Impedance	50 Ohms
VSWR	1.2 max
Insertion Loss	0.12√f(GHz)dB max
Dielectric Withstand Voltage	500Vrms
Contact Resistance	Center Contact: 6mΩ max Outer Contact: 3mΩ max
Insulation Resistance	5000MΩ min@100V
Mating Cycles	SMA: 500 min; SMP: 100 min(full detent)

▶ Material & Finishing

Center Conductor	Beryllium Copper, Gold Plating
Outer Conductor	Stainless Steel, Passivated & Beryllium Copper, Gold Plating
Insulators	PTFE

▶ Mechanical

Force to Engage/Disengage	SMA: 0.23Nm max; SMP: 22N~68N(full limited), 9N~45N(limited detent)
Recommended Mating Torque	SMA: 0.79Nm~1.13Nm

▶ Environmental

Vibration	Method 204, Test Condition D
Shock	Method 213, Test Condition I
Thermal Shock	Method 107, Test Condition B
Corrosion (Salt Spray)	Method 101, Test Condition B
Moisture Resistance	Method 106, Insulation Resistance≥200MΩ

Notes:

1. ALL SPECIFICATIONS ARE SUBJECT TO CHANGE WITHOUT NOTICE AT ANY TIME
2. CUSTOMER OUTLINE DRAWING FOR REFERENCE ONLY

DRAWN: L. Ma 26/03/22

ENGINEER: J. Zhu 26/03/22

APPROVED: C. Chen 26/03/22

TOLERANCE UNLESS OTHERWISE SPECIFIED

x	±0.50	[0.019"]
.x	±0.20	[0.008"]
.xx	±0.10	[0.004"]
ANGLES	±1°	

TITLE: Coaxial Adapter, SMA-Female to SMP-Female, Straight, DC~18GHz

PART No.: TMCASFPF-A

成都巨人微波 TITAN MICROWAVE INC.
- A Professional RF & Microwave Components Supplier -

DIMENSIONS IN MILLIMETERS(mm)

SIZE:	SCALE:	SHEET:	REV:
A4		1/1	A