REV	DESCRIPTION OF REVISION	By	DATE	APPROVED
A	INITIAL RELEASE	C. Cai	2024/5/15	C. Chen

TECHNICAL DATA

▶ Electrical Data

Frequency Range	500~2500MHz
Insertion Loss	0.3dB max
Primary Line VSWR	1.35:1 max
Coupling	40±1.2dB
Coupling Flatness	±0.5dB max
Directivity	18dB min
Power(primary line)	500W max

▶ Mechanical Data

Dimensions	63.5×38×28mm
Input/Output Connector	N-Female
Coupled Connector	SMA-Female
Surface Finish	Conductive Oxidation

▶ Environmental Data

Operating Temperature	-40℃~+70℃

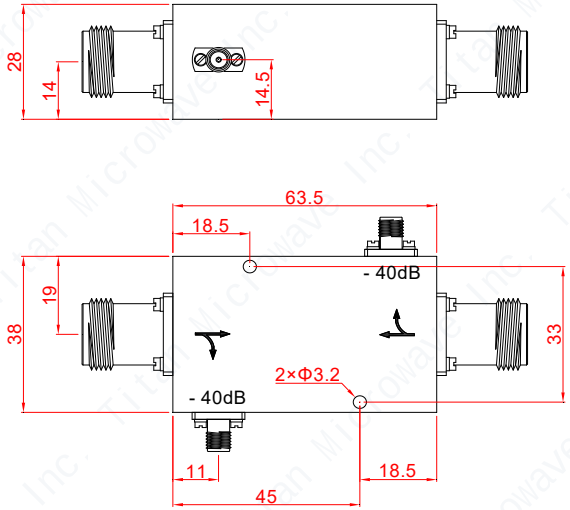

Notes:

1. ALL SPECIFICATIONS ARE SUBJECT TO CHANGE WITHOUT NOTICE AT ANY TIME
2. CUSTOMER OUTLINE DRAWING FOR REFERENCE ONLY

DRAWN: L. Ma 15/05/24

ENGINEER: J. Zhu 15/05/24

APPROVED: C. Chen 15/05/24

TOLERANCE UNLESS OTHERWISE SPECIFIED

x	±0.50	[0.019"]
.x	±0.20	[0.008"]
.xx	±0.10	[0.004"]
ANGLES	±1°	

TITLE:

Dual Directional Coupler, 500~2500MHz, 40dB, 500W, N-Female & SMA-Female

PART No.:

TDDC-00500250-40NS500

成都巨人微波
TITAN MICROWAVE INC.
- A Professional RF & Microwave Components Supplier -
www.titan-microwave.com

DIMENSIONS IN MILLIMETERS(mm)

SIZE:	SCALE:	SHEET:	REV:
A4		1/1	A

Titan Microwave Inc.