REV	DESCRIPTION OF REVISION	By	DATE	APPROVED
A	INITIAL RELEASE	C. Cai	2022/4/16	C. Chen

TECHNICAL DATA

▶ Electrical Data

Frequency Range	1000~6000MHz
Insertion Loss(average)	1.0dB max
VSWR	1.5:1 typ, 1.7:1 max
Isolation	14dB min
Phase Balance	±5° max
Amplitude Balance	±0.6dB max
Power Handling	200W(CW)

▶ Mechanical Data

Dimensions	38.1×25.4×2.9mm max
Connector Type	SMD
Surface Finish	Immersion Gold

▶ Environmental Data

Operating Temperature	-55℃~+85℃

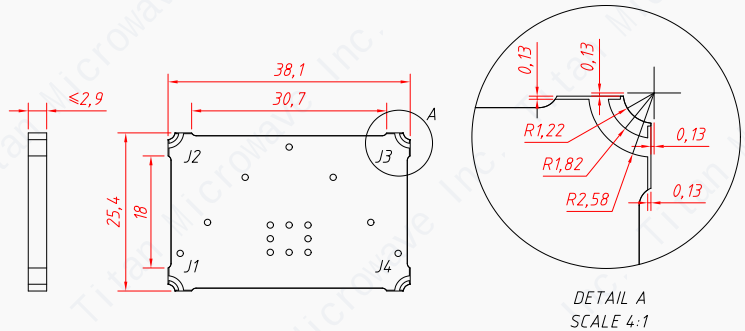

INPUT	J1	J2	J3	J4
J1	-----	-3dB<-90°	-3dB<0°	Isolation
J2	-3dB<-90°	-----	Isolation	-3dB<0°
J3	-3dB<0°	Isolation	-----	-3dB<-90°
J4	Isolation	-3dB<0°	-3dB<-90°	-----

Notes:

1. ALL SPECIFICATIONS ARE SUBJECT TO CHANGE WITHOUT NOTICE AT ANY TIME
2. CUSTOMER OUTLINE DRAWING FOR REFERENCE ONLY

DRAWN: L. Ma 16/04/22

ENGINEER: J. Zhu 16/04/22

APPROVED: C. Chen 16/04/22

TOLERANCE UNLESS OTHERWISE SPECIFIED

x	±0.50	[0.019"]
.x	±0.20	[0.008"]
.xx	±0.10	[0.004"]
ANGLES	±1°	

TITLE:

SMD 90 Degree Hybrid Coupler, 3dB, 1-6GHz, 200W

PART No.:

TM0187-3-200

成都巨人微波
TITAN MICROWAVE INC.
- A Professional RF & Microwave Components Supplier -
www.titan-microwave.com

DIMENSIONS IN MILLIMETERS(mm)

SIZE:	SCALE:	SHEET:	REV:
A4		1/1	A

Titan Microwave Inc.