REV	DESCRIPTION OF REVISION	By	DATE	APPROVED
A	INITIAL RELEASE	C. Cai	2023/9/16	C. Chen

TECHNICAL DATA

▶ Electrical Data

Frequency Range	470~650MHz
Insertion Loss	0.6dB max
VSWR	1.3:1 max
Isolation	18dB min
Forward Power	300W
Reverse Power	100W
Direction	Clockwise
Impedance	50 Ohms

▶ Mechanical Data

Dimensions	45×80×24mm
Connector	N-Female
Material	Aluminum
Surface Finish	Nickel Plated

▶ Environmental Data

Operating Temperature	-30℃~+70℃
Storage Temperature	-40℃~+90℃

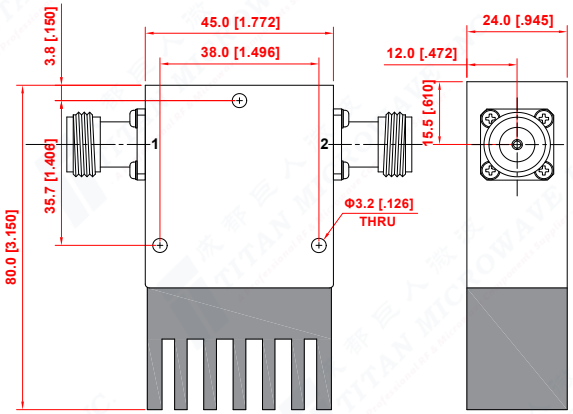

Notes:

1. ALL SPECIFICATIONS ARE SUBJECT TO CHANGE WITHOUT NOTICE AT ANY TIME
2. CUSTOMER OUTLINE DRAWING FOR REFERENCE ONLY

DRAWN: L. Ma 16/09/23

ENGINEER: J. Zhu 16/09/23

APPROVED: C. Chen 16/09/23

TOLERANCE UNLESS OTHERWISE SPECIFIED

x	±0.50	[0.019"]
.x	±0.20	[0.008"]
.xx	±0.10	[0.004"]
ANGLES	±1°	

TITLE:

Coaxial Isolator
470-650MHz,
300W, N-Female

PART No.:

TMCI-00470065-300N

成都巨人微波
TITAN MICROWAVE INC.
- A Professional RF & Microwave Components Supplier -
www.titan-microwave.com

DIMENSIONS IN MILLIMETERS(mm)

SIZE:	SCALE:	SHEET:	REV:
A4		1/1	A